AVS50
Louvre System 2014
Product Data Sheet

JACK ALUMINIUM SYSTEMS

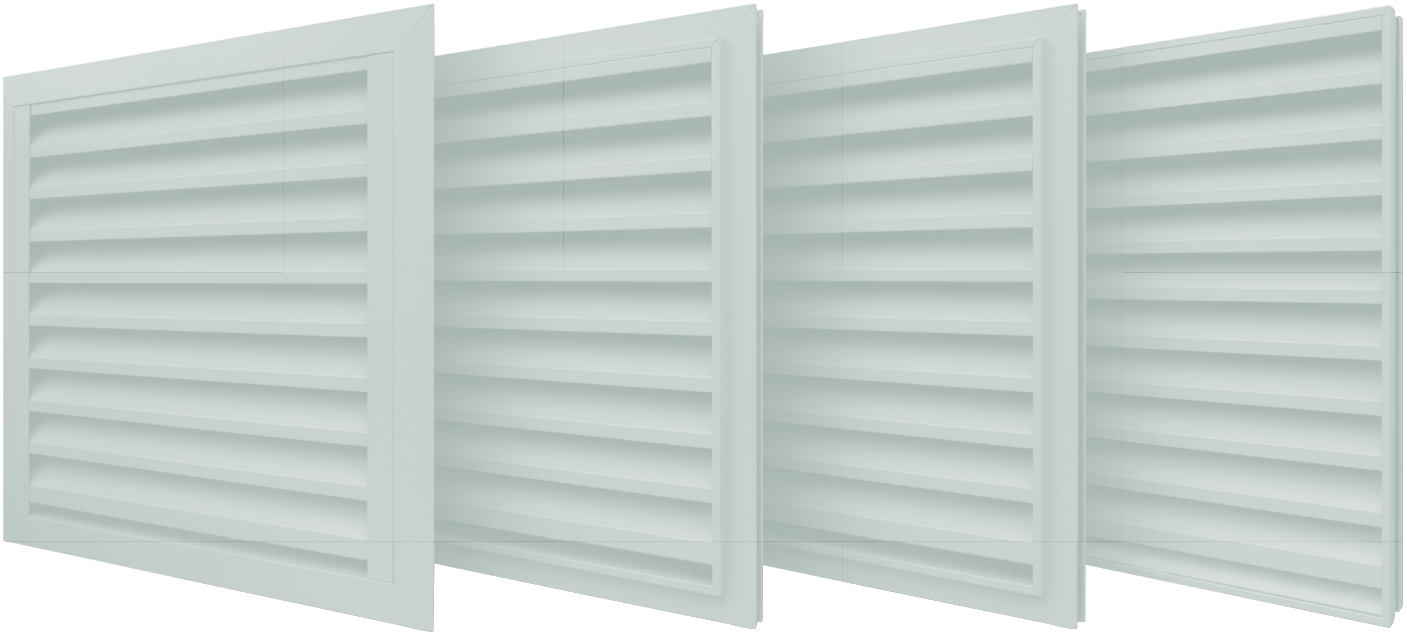

General Description

The AVS50 is a medium format louvre system specifically designed for commercial projects where increased airflow and/or free area performances may be required.

Technical Details

Materials
- Manufactured With Extruded Aluminium Alloy to 6063 T6 (UK Sourced)
- Mechanically Jointed Corners
- Profile thickness 1.5mm

Performance
- Refer to BSRIA performance evaluation data on pages 2-5
- 50% Free area based on louvre core (excludes top and bottom blade arrangements)
- Airflow performance Mean Ce 0.272 with Flyscreen / Ce0.257 with Birdguard

Dimensions
- 50mm Blade Pitch
- 60mm Depth o/all
- Glazing Rebate Height 30mm

Options
- 24 & 28mm Glazed-In Outer Frames
- Box Frame and Flanged Outer Frame
- Hybrid Surface Mounted Option
- Flyscreen (Stainless Steel or External Grade Black Fibreglass) or Birdguard
- Water Drainage Profile
- Enhanced Security Option
- Blanking Panels (Thermal or Standard)

Tel: 024 7646 7449 • Fax: 024 7646 9073

www.jackaluminium.co.uk • sales@jackaluminium.co.uk

Jack Aluminium Systems Ltd, Unit 5, Binns Close, Coventry, CV4 9TB

AVS50
Louvre System 2014
Performance Data 1

JACK ALUMINIUM SYSTEMS

Classification from design tests undertaken by BSRIA on 12.08.2013 based on a 980 x 967 core louvre area (0.948m2).

Weathering Performance with Flyscreen:

VENTILATION RATE		WATER FLOW RATES			
Volume m^3/s	Velocity m/s	Supply l/h	Penetrated l/h	Effectiveness	Class
0.00	0.00	93.0	1.0	98.6%	B
0.47	0.50	93.0	1.3	98.2%	B
0.95	1.00	93.0	6.1	91.4%	C
1.43	1.51	93.0	11.6	83.7%	C
1.89	2.00	93.0	20.3	71.5%	D
2.37	2.50	93.0	32.5	54.3%	D

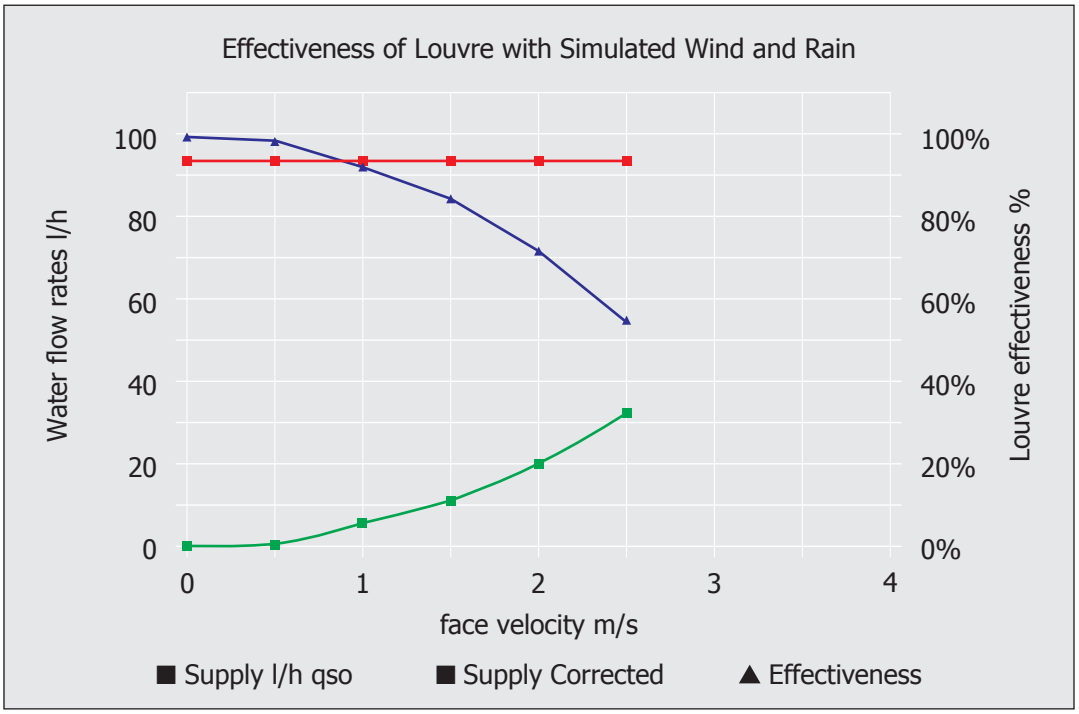

Weathering performance data includes water drainage profile. Please consult AVS for performance excluding drainage profile.

Tel: 024 7646 7449 • Fax: 024 7646 9073

www.jackaluminium.co.uk • sales@jackaluminium.co.uk

Jack Aluminium Systems Ltd, Unit 5, Binns Close, Coventry, CV4 9TB

AVS50
Louvre System 2014
Performance Data 2

JACK ALUMINIUM SYSTEMS

Airflow Performance with Flyscreen:

Louvre pd Pascals	LOUVRE FACE VELOCITY m/s	AIR FLOW RATE Test m^3/s	Theoretical m^3/s	Coefficient C_e
31.4	1.91	1.814	6.828	0.266
41.2	2.23	2.113	7.821	0.270
55.7	2.60	2.468	9.094	0.271
67.3	2.88	2.730	9.996	0.273
79.2	3.13	2.968	10.844	0.274
90.9	3.32	3.148	11.617	0.271
102.7	3.54	3.356	12.348	0.272
117.6	3.82	3.620	13.213	0.274
130.4	4.01	3.804	13.914	0.273
150.7	4.30	4.076	14.958	0.273
			mean C_e	0.272
			Class	3

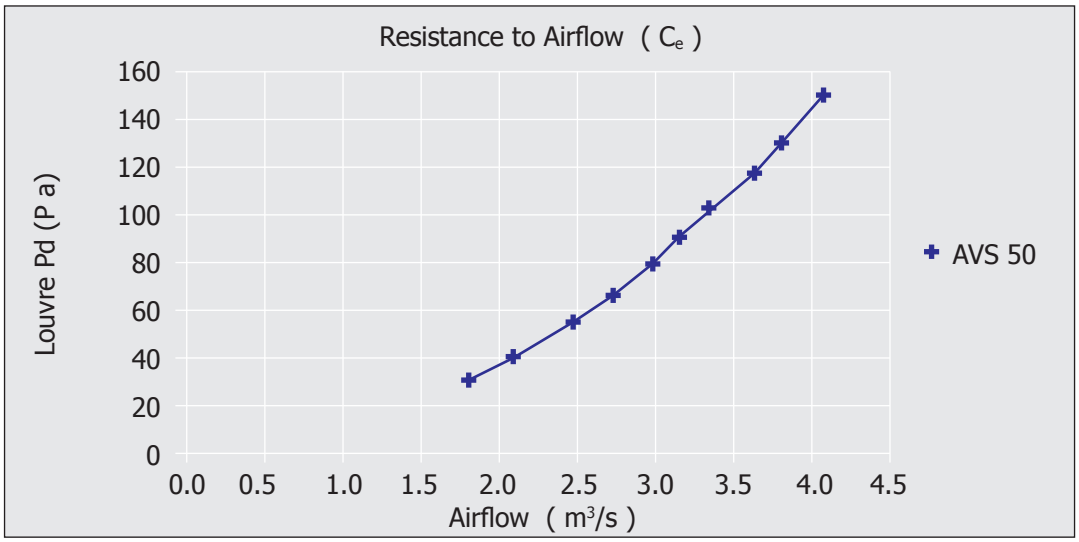

NB. The theoretical airflow rate is based on the face area of the louvre with the blades removed, and the coefficient is the measured airflow rate divided by the theoretical airflow rate.

Tel: 024 7646 7449 • Fax: 024 7646 9073

www.jackaluminium.co.uk • sales@jackaluminium.co.uk

Jack Aluminium Systems Ltd, Unit 5, Binns Close, Coventry, CV4 9TB

AVS50
Louvre System 2014
Performance Data 2

JACK ALUMINIUM SYSTEMS

Weathering Performance with Birdguard:

Classification from design tests undertaken by BSRIA on 12.08.2013 based on a 980 x 967 core louvre area (0.948m2).

VENTILATION RATE		WATER FLOW RATES			
Volume m^3/s	Velocity m/s	Supply l/h	Penetrated l/h	Effectiveness	Class
0.00	0.00	93.0	5.0	92.9%	C
0.47	0.50	93.0	6.9	90.2%	C
0.95	1.00	93.0	8.2	88.5%	C
1.42	1.50	93.0	12.7	82.2%	C
1.89	2.00	93.0	19.9	72.0%	D
2.37	2.50	93.0	36.6	48.4%	D

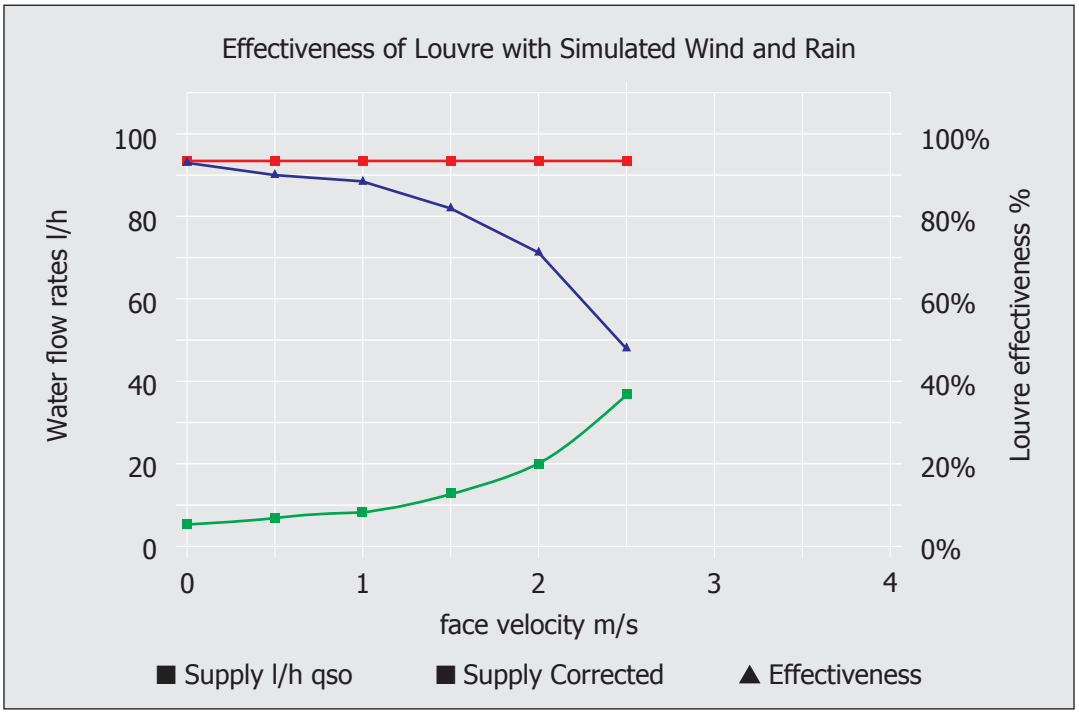

Weathering performance data includes water drainage profile. Please consult AVS for performance excluding drainage profile.

Tel: 024 7646 7449 • Fax: 024 7646 9073

www.jackaluminium.co.uk • sales@jackaluminium.co.uk

Jack Aluminium Systems Ltd, Unit 5, Binns Close, Coventry, CV4 9TB

AVS50
Louvre System 2014
Performance Data 2

JACK ALUMINIUM SYSTEMS

Airflow Performance with Birdguard:

Louvre pd Pascals	LOUVRE FACE VELOCITY m/s	AIR FLOW RATE Test m^3/s	Theoretical m^3/s	Coefficient C_e
33.1	1.90	1.816	7.060	0.257
45.6	2.23	2.130	8.287	0.257
61.4	2.59	2.474	9.616	0.257
74.7	2.86	2.724	10.606	0.257
87.8	3.09	2.945	11.499	0.256
100.2	3.31	3.160	12.284	0.257
112.4	3.52	3.360	13.010	0.258
132.3	3.81	3.634	14.115	0.257
144.4	4.00	3.811	14.746	0.258
163.9	4.23	4.032	15.710	0.257
			mean C_e	0.257
			Class	3

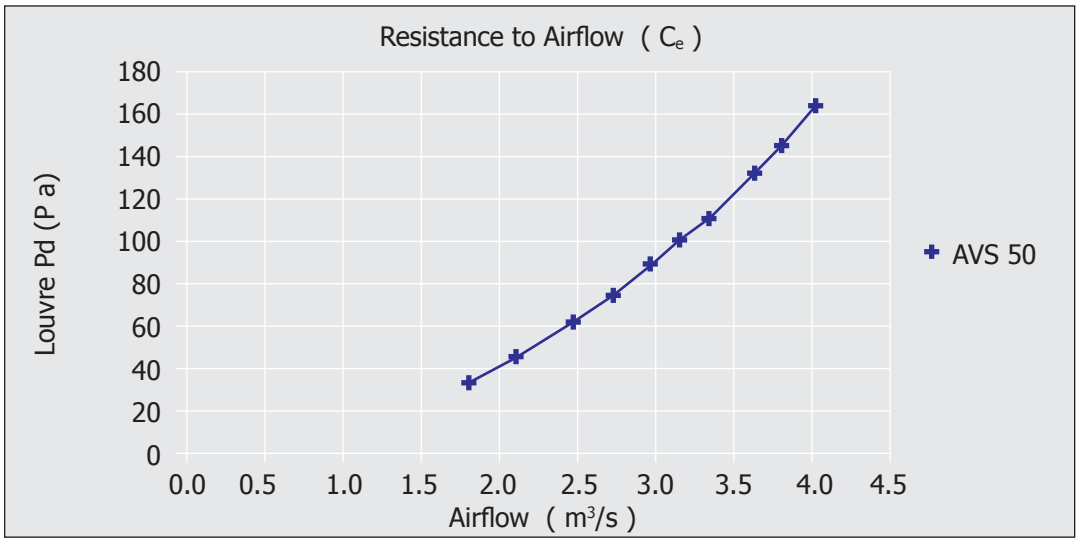

NB. The theoretical airflow rate is based on the face area of the louvre with the blades removed, and the coefficient is the measured airflow rate divided by the theoretical airflow rate.

Tel: 024 7646 7449 • Fax: 024 7646 9073

www.jackaluminium.co.uk • sales@jackaluminium.co.uk

Jack Aluminium Systems Ltd, Unit 5, Binns Close, Coventry, CV4 9TB

AVS50

Louvre System 2014

Product Variants

JACK ALUMINIUM SYSTEMS

AVS50 GL 24

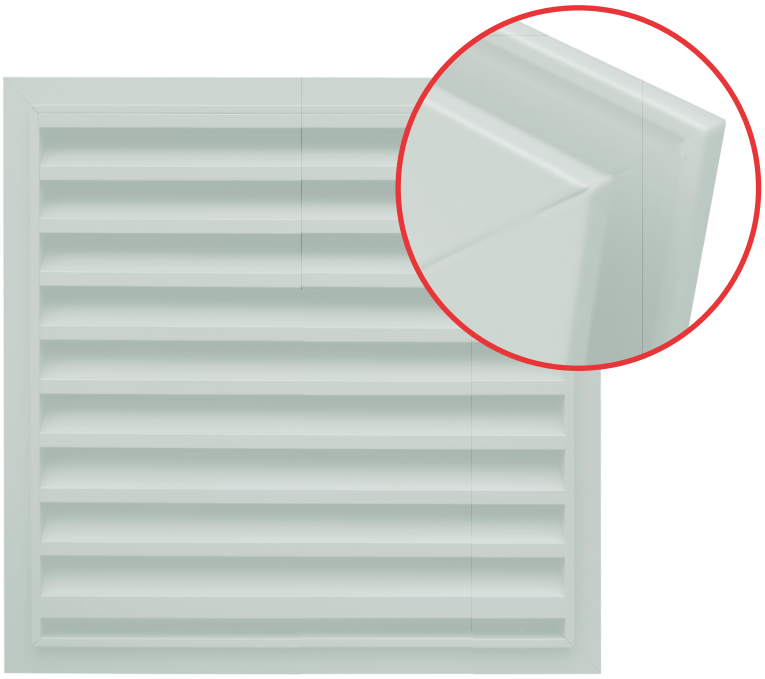

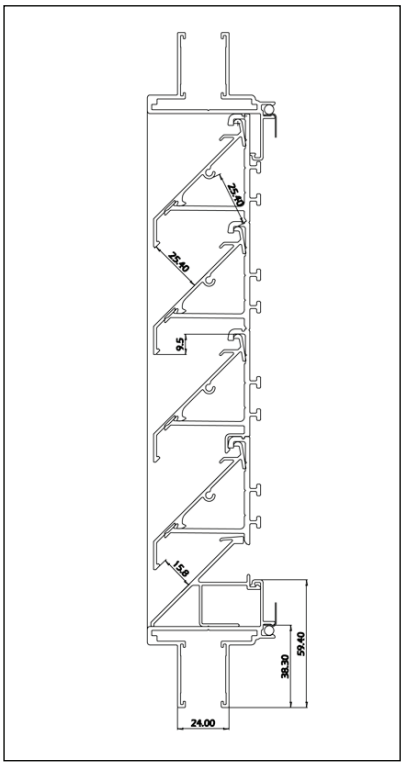

AVS50 GL 28

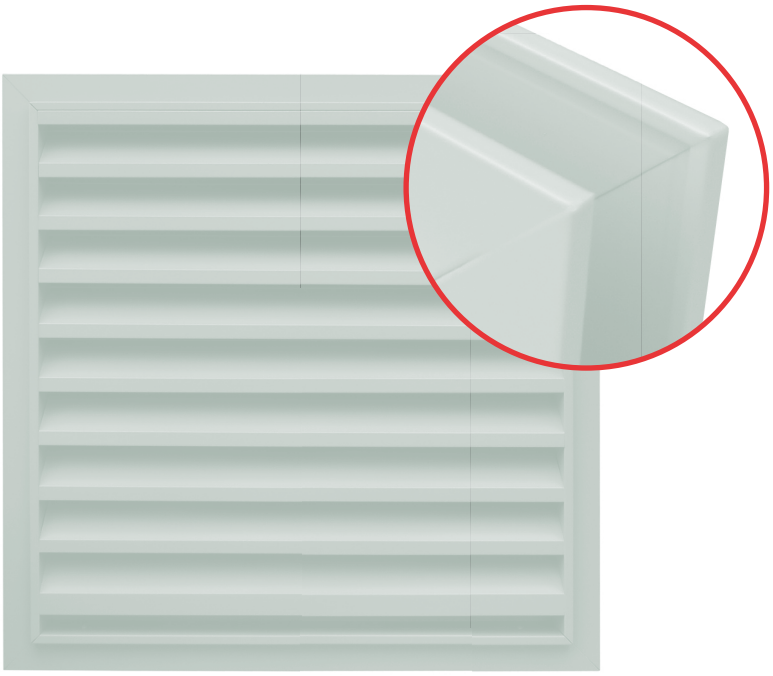

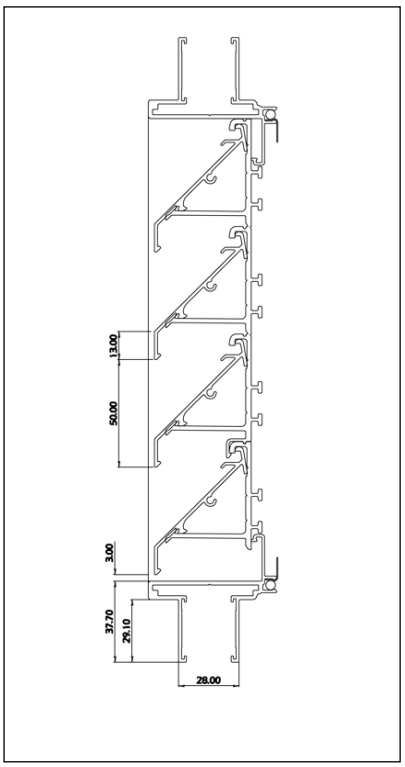

Tel: 024 7646 7449 • Fax: 024 7646 9073

www.jackaluminium.co.uk • sales@jackaluminium.co.uk

Jack Aluminium Systems Ltd, Unit 5, Binns Close, Coventry, CV4 9TB

AVS50

Louvre System 2014

Product Variants

JACK ALUMINIUM SYSTEMS

AVS50 FL

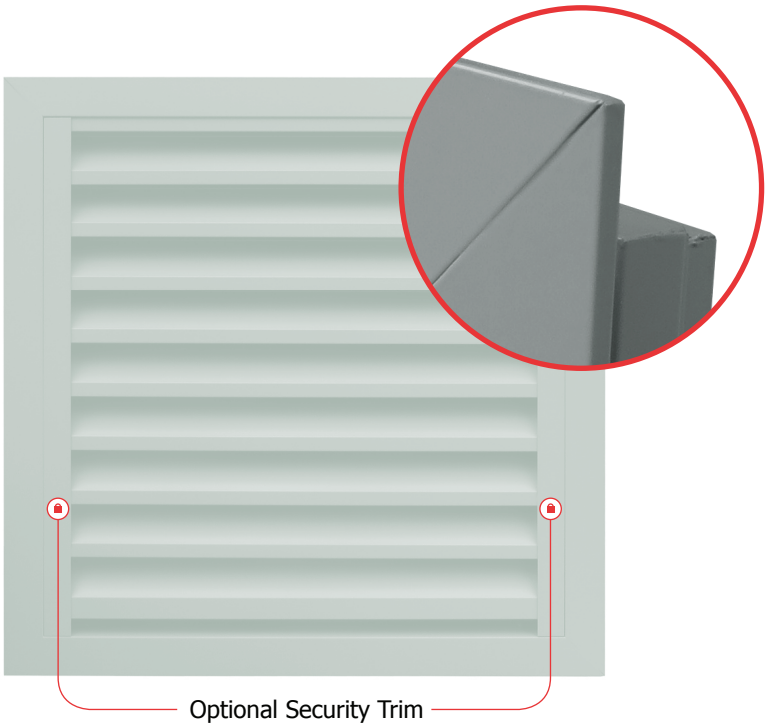

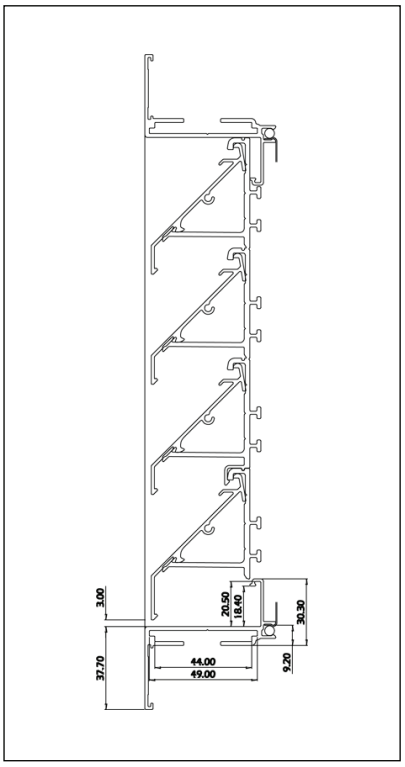

AVS50 BF

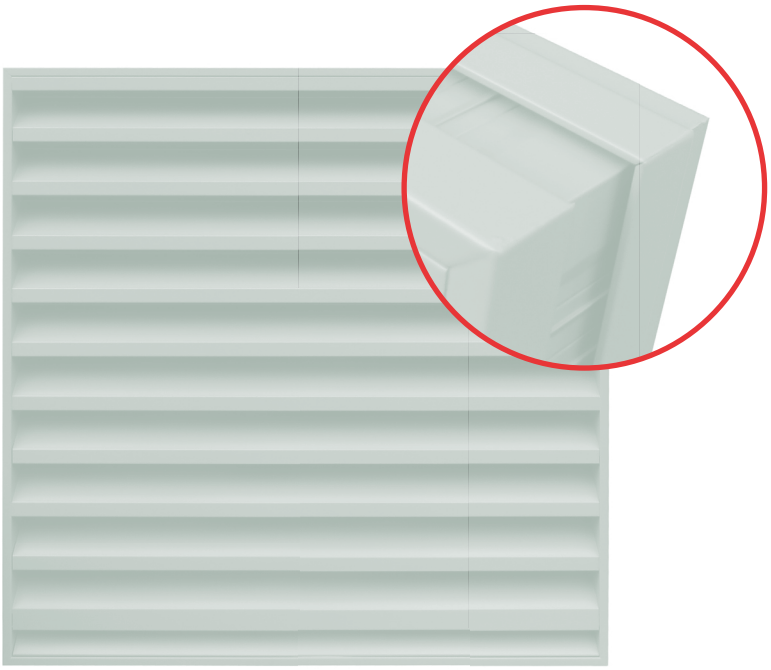

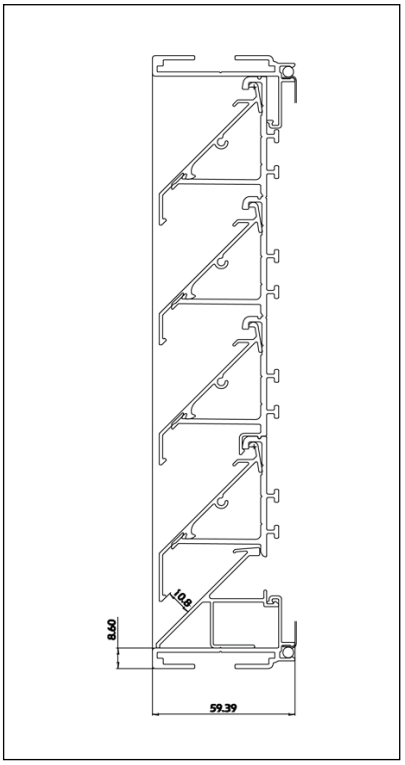

Tel: 024 7646 7449 • Fax: 024 7646 9073

www.jackaluminium.co.uk • sales@jackaluminium.co.uk

Jack Aluminium Systems Ltd, Unit 5, Binns Close, Coventry, CV4 9TB